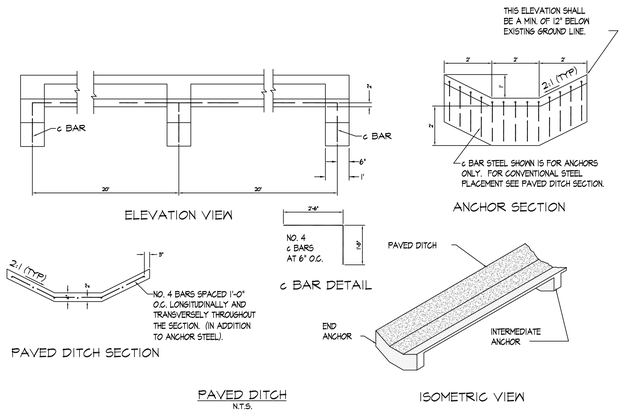

PAVED DITCH
N.T.S.

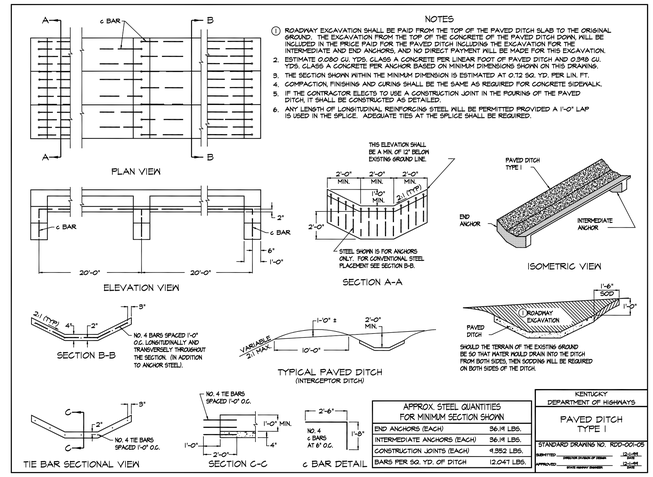

NOTES

1. ROADWAY EXCAVATION SHALL BE PAID FROM THE TOP OF THE PAVED DITCH SLAB TO THE ORIGINAL GROUND. THE EXCAVATION FROM THE TOP OF THE CONCRETE OF THE PAVED DITCH DOWN WILL BE INCLUDED IN THE PRICE PAID FOR THE PAVED DITCH INCLUDING THE EXCAVATION FOR THE INTERMEDIATE AND END ANCHORS, AND NO DIRECT PAYMENT WILL BE MADE FOR THIS EXCAVATION.
2. ESTIMATE 0.080 CU. YDS. CLASS A CONCRETE PER LINEAR FOOT OF PAVED DITCH AND 0.3MB CU. YDS. CLASS A CONCRETE PER ANCHOR BASED ON MINIMUM DIMENSIONS SHOWN ON THIS DRAWING.
3. THE SECTION SHOWN WITHIN THE MINIMUM DIMENSION IS ESTIMATED AT 0.72 SQ. YD. PER LIN. FT.
4. COMPACTION, FINISHING AND CURING SHALL BE THE SAME AS REQUIRED FOR CONCRETE SIDEWALK.
5. IF THE CONTRACTOR ELECTS TO USE A CONSTRUCTION JOINT IN THE POURING OFF THE PAVED DITCH, IT SHALL BE CONSTRUCTED AS DETAILED.
6. ANY LENGTH OF LONGITUDINAL REINFORCING STEEL WILL BE PERMITTED PROVIDED A 1'-0" LAP IS USED IN THE SPLICE. ADEQUATE TIES AT THE SPLICE SHALL BE REQUIRED.

APPROX. STEEL QUANTITIES FOR MINIMUM SECTION SHOWN	
END ANCHORS (EACH)	36.14 LBS.
INTERMEDIATE ANCHORS (EACH)	36.14 LBS.
CONSTRUCTION JOINTS (EACH)	41.552 LBS.
BARS PER SQ. YD. OF DITCH	12.047 LBS.

KENTUCKY DEPARTMENT OF HIGHWAYS
PAVED DITCH TYPE I
STANDARD DRAWING NO. RDS-001-05

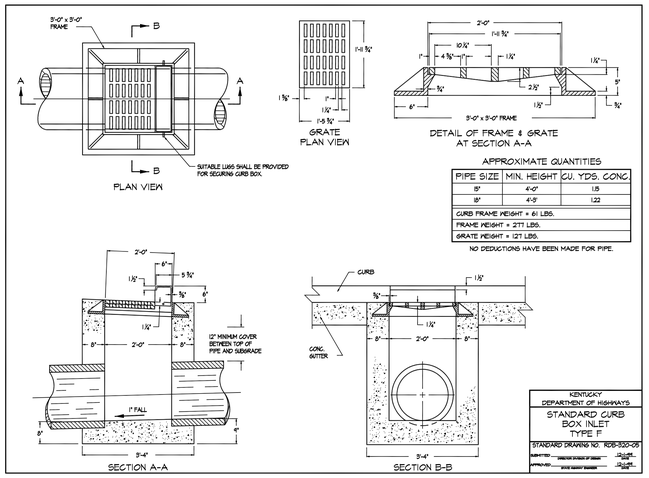

APPROXIMATE QUANTITIES

PIPE SIZE	MIN. HEIGHT	CU. YDS. CONC.
15"	4'-0"	1.15
18"	4'-9"	1.22
CURB FRAME WEIGHT = 61 LBS.		
FRAME WEIGHT = 277 LBS.		
GRATE WEIGHT = 127 LBS.		

NO DEDUCTIONS HAVE BEEN MADE FOR PIPE.

KENTUCKY DEPARTMENT OF HIGHWAYS
STANDARD CURB BOX INLET TYPE F
STANDARD DRAWING NO. RDS-020-05

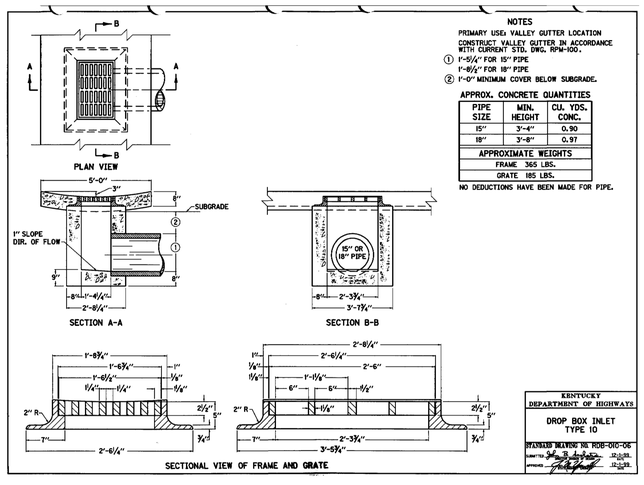

NOTES

PRIMARY USE: VALLEY GUTTER LOCATION
CONSTRUCT VALLEY GUTTER IN ACCORDANCE WITH CURRENT STD. DWG. RPM-100.

1. 1'-5¼" FOR 15" PIPE
   1'-8½" FOR 18" PIPE
2. 1'-0" MINIMUM COVER BELOW SUBGRADE.

APPROX. CONCRETE QUANTITIES

PIPE SIZE	MIN. HEIGHT	CU. YDS. CONC.
15"	3'-4"	0.90
18"	3'-8"	0.97
APPROXIMATE WEIGHTS		
FRAME 365 LBS.		
GRATE 185 LBS.		

NO DEDUCTIONS HAVE BEEN MADE FOR PIPE.

KENTUCKY DEPARTMENT OF HIGHWAYS
DROP BOX INLET TYPE 10
STANDARD DRAWING NO. RDS-010-05

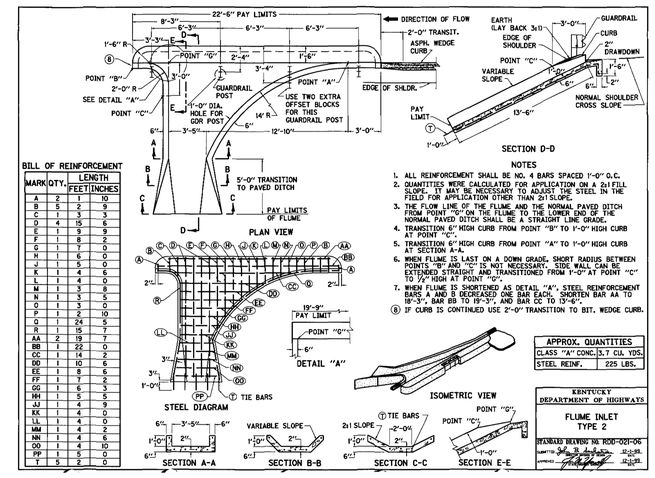

BILL OF REINFORCEMENT

MARK	QTY.	LENGTH FEET	LENGTH INCHES
A	2	1	10
B	5	2	9
C	1	3	3
D	4	15	6
E	1	9	9
F	1	8	2
G	1	7	0
H	1	6	0
J	1	5	0
K	1	4	6
L	1	4	0
M	1	3	8
N	1	3	5
O	1	3	0
P	1	2	10
Q	1	24	5
R	1	15	7
AA	2	19	7
BB	1	22	0
CC	1	14	2
DD	1	10	6
EE	1	8	6
FF	1	7	2
GG	1	6	3
HH	1	5	5
JJ	1	4	9
KK	1	4	0
LL	1	4	0
MM	1	4	2
NN	1	4	6
OO	1	4	10
PP	1	5	2
T	5	2	0

NOTES

1. ALL REINFORCEMENT SHALL BE NO. 4 BARS SPACED 1'-0" O.C.
2. QUANTITIES WERE CALCULATED FOR APPLICATION ON A 2:1 FILL SLOPE. IT MAY BE NECESSARY TO ADJUST THE STEEL IN THE FIELD FOR APPLICATION OTHER THAN 2:1 SLOPE.
3. THE FLOW LINE OF THE FLUME AND THE NORMAL PAVED DITCH FROM POINT "C" ON THE FLUME TO THE LOWER END OF THE NORMAL PAVED DITCH SHALL BE A STRAIGHT LINE GRADE.
4. TRANSITION 6" HIGH CURB FROM POINT "B" TO 1'-0" HIGH CURB AT POINT "C".
5. TRANSITION 6" HIGH CURB FROM POINT "A" TO 1'-0" HIGH CURB AT SECTION A-A.
6. WHEN FLUME IS LAST ON A DOWN GRADE, SHORT RADIUS BETWEEN POINTS "B" AND "C" IS NOT NECESSARY. SIDE WALL CAN BE EXTENDED STRAIGHT AND TRANSITIONED FROM 1'-0" AT POINT "C" TO 1½" HIGH AT POINT "C".
7. WHEN FLUME IS SHORTENED AS DETAIL "A", STEEL REINFORCEMENT BARS A AND B DECREASED ONE BAR EACH. SHORTEN BAR AA TO 18'-3", BAR BB TO 19'-3", AND BAR CC TO 13'-6".
8. IF CURB IS CONTINUED USE 2'-0" TRANSITION TO BIT. WEDGE CURB.

APPROX. QUANTITIES

CLASS "A" CONC.	3.7 CU. YDS.
STEEL REINF.	225 LBS.

KENTUCKY DEPARTMENT OF HIGHWAYS
FLUME INLET TYPE 2
STANDARD DRAWING NO. RDS-021-05

NOTE:
STANDARD FLUME DRAWING PROVIDED FOR REFERENCE ONLY. FLUME INLET MUST BE CONSTRUCTED ON A RADIUS AND FLUME OUTLET CHANNEL MUST BE ALIGNED WITH THE RECEIVING DITCH

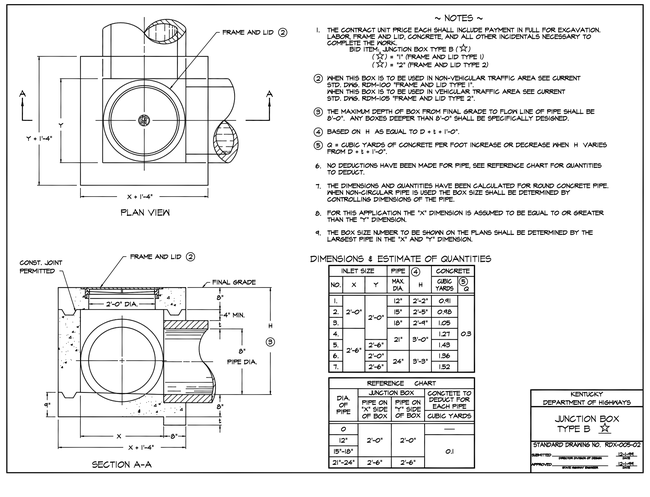

~ NOTES ~

1. THE CONTRACT UNIT PRICE EACH SHALL INCLUDE PAYMENT IN FULL FOR EXCAVATION, LABOR, FRAME AND LID, CONCRETE, AND ALL OTHER INCIDENTALS NECESSARY TO COMPLETE THE WORK.
   BID ITEM, JUNCTION BOX TYPE B (X')
   (X') = 1' (FRAME AND LID TYPE 1)
   (X') = 2' (FRAME AND LID TYPE 2)
2. WHEN THIS BOX IS TO BE USED IN NON-VEHICULAR TRAFFIC AREA SEE CURRENT STD. DWG. RDM-100 "FRAME AND LID TYPE 1".
   WHEN THIS BOX IS TO BE USED IN VEHICULAR TRAFFIC AREA SEE CURRENT STD. DWG. RDM-105 "FRAME AND LID TYPE 2".
3. THE MAXIMUM DEPTH OF BOX FROM FINAL GRADE TO FLOW LINE OF PIPE SHALL BE 8'-0". ANY BOXES DEEPER THAN 8'-0" SHALL BE SPECIFICALLY DESIGNED.
4. BASED ON H AS EQUAL TO D + t + 1'-0".
5. Q = CUBIC YARDS OF CONCRETE PER FOOT INCREASE OR DECREASE WHEN H VARIES FROM D + t + 1'-0".
6. NO DEDUCTIONS HAVE BEEN MADE FOR PIPE. SEE REFERENCE CHART FOR QUANTITIES TO DEDUCT.
7. THE DIMENSIONS AND QUANTITIES HAVE BEEN CALCULATED FOR ROUND CONCRETE PIPE. WHEN NON-CIRCULAR PIPE IS USED THE BOX SIZE SHALL BE DETERMINED BY CONTROLLING DIMENSIONS OF THE PIPE.
8. FOR THIS APPLICATION THE "X" DIMENSION IS ASSUMED TO BE EQUAL TO OR GREATER THAN THE "Y" DIMENSION.
9. THE BOX SIZE NUMBER TO BE SHOWN ON THE PLANS SHALL BE DETERMINED BY THE LARGEST PIPE IN THE "X" AND "Y" DIMENSION.

DIMENSIONS & ESTIMATE OF QUANTITIES

INLET SIZE NO.	X	Y	PIPE ④ MAX. DIA.	H	CONCRETE CUBIC YARDS	Q
1.	2'-0"	2'-0"	12"	2'-2"	0.16	0.3
2.			15"	2'-5"	0.18	
3.			18"	2'-8"	1.05	
4.	2'-6"		21"	3'-0"	1.27	
5.			24"	3'-3"	1.45	
6.		2'-0"			1.36	
7.		2'-6"			1.52	

REFERENCE CHART

DIA. OF PIPE	JUNCTION BOX PIPE ON "X" SIDE OF BOX	JUNCTION BOX PIPE ON "Y" SIDE OF BOX	CONCRETE TO DEDUCT FOR EACH PIPE CUBIC YARDS
0	2'-0"	2'-0"	—
12"			0.1
15"-18"	2'-6"	2'-6"	
21"-24"			

KENTUCKY DEPARTMENT OF HIGHWAYS
JUNCTION BOX TYPE B
STANDARD DRAWING NO. RDX-005-02

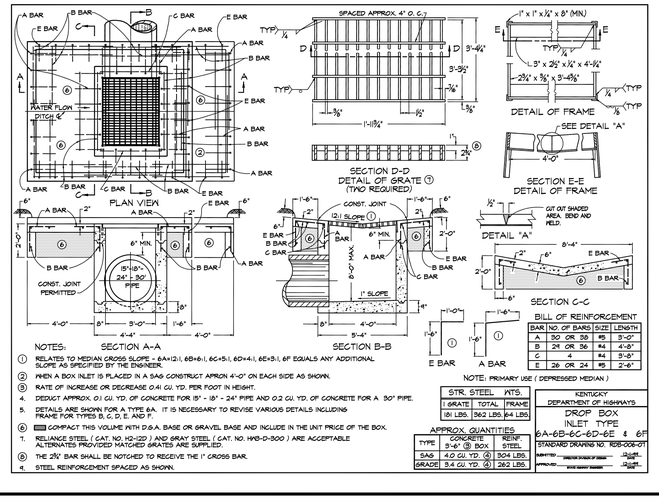

NOTES:

1. ① RELATES TO MEDIAN CROSS SLOPE = 6A+12.1, 6B+6.1, 6C+5.1, 6D+4.1, 6E+3.1, 6F EQUALS ANY ADDITIONAL SLOPE AS SPECIFIED BY THE ENGINEER.
2. ② WHEN A BOX INLET IS PLACED IN A SAG CONSTRUCT APRON 4'-0" ON EACH SIDE AS SHOWN.
3. ③ RATE OF INCREASE OR DECREASE 0.41 CU. YD. PER FOOT IN HEIGHT.
4. DEDUCT APPROX. 0.1 CU. YD. OF CONCRETE FOR 15" - 18" - 24" PIPE AND 0.2 CU. YD. OF CONCRETE FOR A 30" PIPE.
5. DETAILS ARE SHOWN FOR A TYPE 6A. IT IS NECESSARY TO REVISE VARIOUS DETAILS INCLUDING FRAME FOR TYPES B, C, D, E, AND F.
6. ⑥ COMPACT THIS VOLUME WITH D.G.A. BASE OR GRAVEL BASE AND INCLUDE IN THE UNIT PRICE OF THE BOX.
7. ⑦ RELIANCE STEEL (CAT. NO. H2-123) AND GRAY STEEL (CAT. NO. HWB-D-300) ARE ACCEPTABLE ALTERNATES PROVIDED MATCHED GRATES ARE SUPPLIED.
8. THE 2¾" BAR SHALL BE NOTCHED TO RECEIVE THE 1" CROSS BAR.
9. STEEL REINFORCEMENT SPACED AS SHOWN.

STR. STEEL WTS.		
1 GRATE	TOTAL	FRAME
181 LBS.	362 LBS.	64 LBS.

APPROX. QUANTITIES

TYPE	CONCRETE 3'-6" ③ BOX	REINF STEEL
SAG	4.0 CU. YD. ④	304 LBS.
GRADE	3.4 CU. YD. ④	262 LBS.

BILL OF REINFORCEMENT

BAR	NO. OF BARS	SIZE	LENGTH
A	30 OR 35	#5	5'-0"
B	24 OR 36	#4	4'-0"
C	4	#4	5'-8"
E	28 OR 24	#5	2'-6"

NOTE: PRIMARY USE (DEPRESSED MEDIAN)

KENTUCKY DEPARTMENT OF HIGHWAYS
DROP BOX INLET TYPE 6A-6B-6C-6D-6E & 6F
STANDARD DRAWING NO. RDS-006-01

STORM DRAINAGE DETAILS

FLEX FILMS (U.S.A.) INC.
1221 NORTH BLACK BRANCH ROAD
ELIZABETHTOWN, KENTUCKY 42702

PROJECT L-12 BOPET U.S.A.

DATE	REVISION	BY

DESIGN DOCUMENTS
This document disclaims any and all responsibility and liability for problems which arise from failure to follow these plans, specifications and the design intent they convey.
COPYRIGHT
This document discloses subject matter considered confidential by MSE of Kentucky, Inc. and on which MSE of Kentucky, Inc. claims proprietary rights. Recipient by accepting this document agrees to respect all rights to reproduce the document or any part thereof, or to disclose any information contained therein to others, or to use the document for any purpose without the written permission of MSE of Kentucky, Inc.

PROJECT NO.	2064-25
DESIGNED BY	G.A.R.
DRAWN BY	J.R.M.
CHECKED BY	G.A.R.
REVIEWED BY	G.A.R.
DATE	JUNE 2011
SCALE	AS SHOWN

MSE OF KENTUCKY, INC.
Engineers Architects Planners
624 Wellington Way
Lexington, KY 40503
www.mseake.com
Phone: (859)223-5694
Fax: (859)223-2607

DRAWING NO.
UFL-L12
C-110.3

JUL 30 X:\2064-25 FLEX FILM - ELIZABETHTOWN TJ PATTERSON INDUSTRIAL PARK_C-110 STORM DRAINAGE DETAILS.DWG